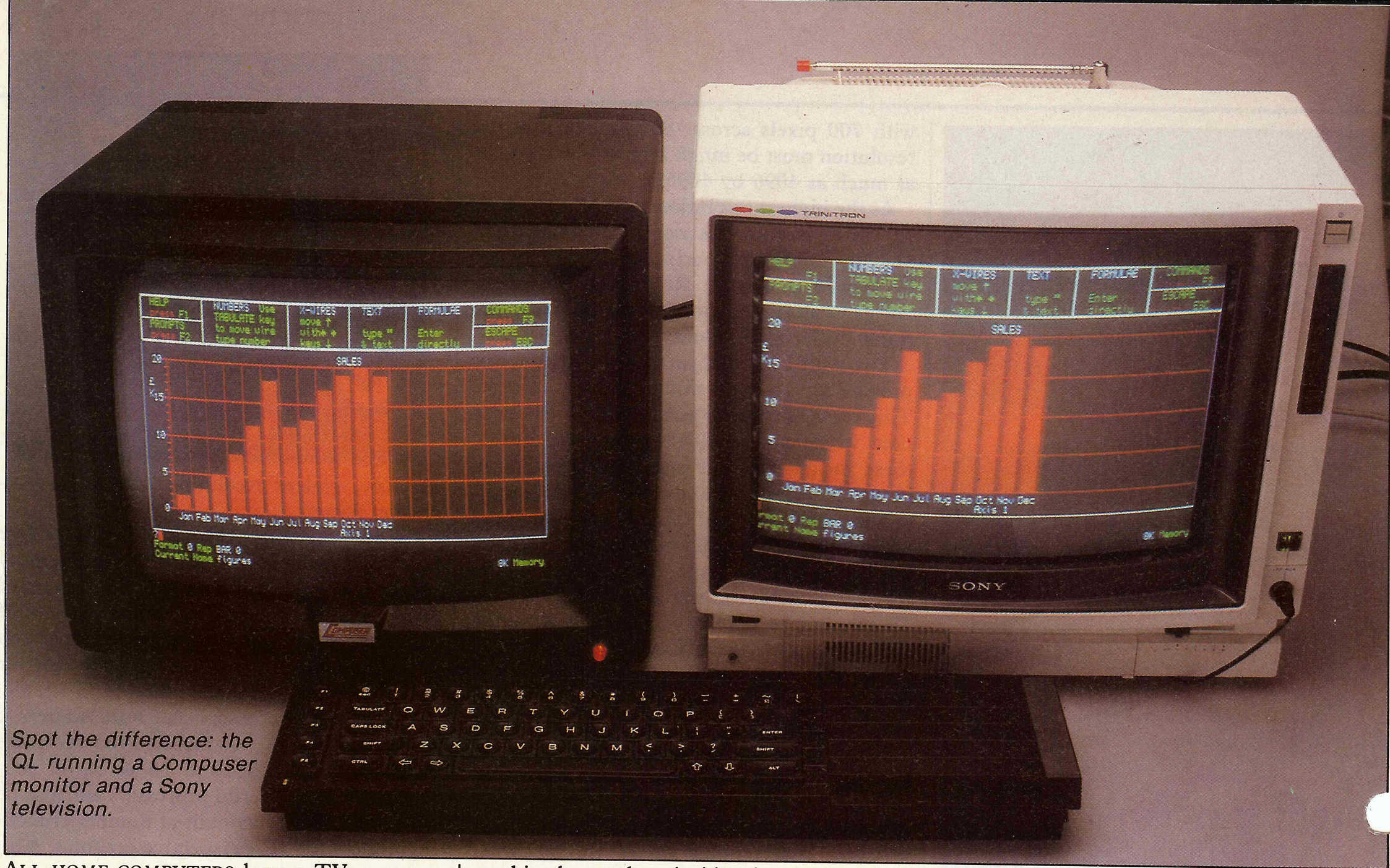


*Spot the difference: the QL running a Compuser monitor and a Sony television.*

ALL HOME COMPUTERS have a TV output to enable owners to use their TV set as the visual display unit — VDU. As the level of sophistication of both computers and software increases, so does the need to display finer-detail graphics —so-called high-resolution graphics—or more text characters per line as in word processing. A TV set is not designed to cope with such demands.

Inside a computer, characters and graphics start life as separate red, green and blue signals, together with a synchronising signal to "lock the display". Most machines have a separate output socket for these signals which is used to drive a monitor. The same signals are combined together inside the computer to produce what is known as a composite video signal which for the U.K. and most of Europe would be colour-encoded according to the PAL system.

Some machines make this signal available instead of the separate red, green, blue — RGB — and sync signals. Examples are the Commodore 64 and Dragon. This is a pity since combining them in the PAL format results in very substantial losses in quality. This is due to a number of factors which relate to the PAL system, but PAL was developed specifically for encoding TV pictures and nothing else.

Incidentally the Acorn BBC computer offers a composite video output, in addition to RGB, but without the colour information, in other words a monochrome composite video signal which has not gone through PAL encoding. This makes it very useful for driving monochrome monitors in applications such as word processing.

Inside the computer, the encoded composite video signal is then passed to a modulator which converts it to a RF signal suitable for feeding into the aerial socket of a TV set. Again a certain degradation occurs. In the TV set, a tuner is used to receive the RF signal, and an IF — intermediate frequency — stage converts

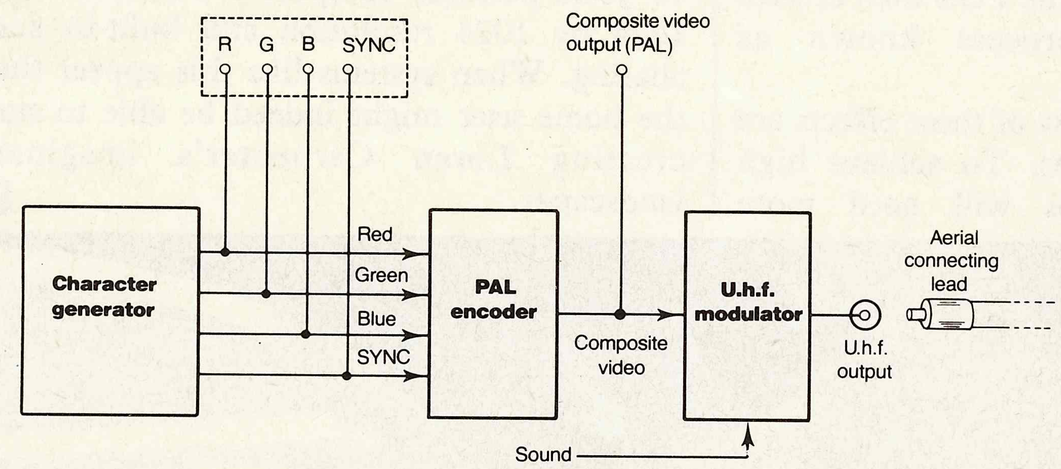


*Figure 1. The encoding process is a computer.*

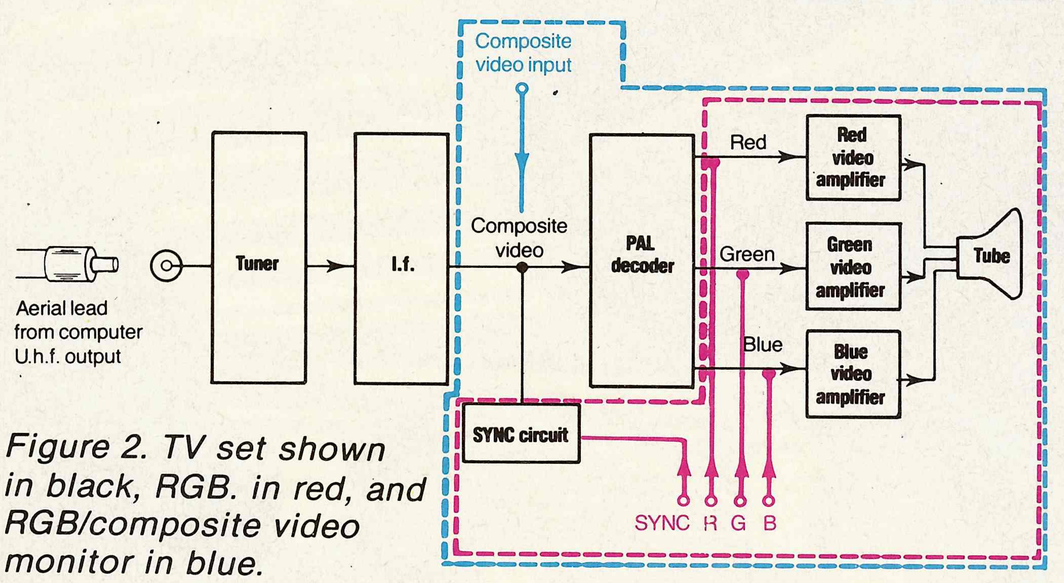


*Figure 2. TV set shown in black, RGB. in red, and RGB/composite video monitor in blue.*

# BUYERS' GUIDE

We chose eight of the most popular computers and looked at the commonly available monitors to suit each one. Use this buyers' guide in conjunction with the main article to ensure that you make the best choice. Our guide does not include TV-monitors; monitors which are designed specifically for up-market computers or monochrome monitors.

We tried to major on products which were reasonably easily available and therefore our list is not necessarily comprehensive. The prices quoted are manufacturers' or distributor prices; with some products it is possible to find them discounted so it's worth shopping around. None of the manufacturers we spoke to had done final testing on MSX products so rather than taking any risks on accuracy we decided to exclude these machines.

It is very likely that some MSX manufacturers who are also TV manufacturers — e.g., JVC and Toshiba — are likely to introduce TV-monitors suitable for these machines. In any case, the requirement is only for standard resolution and therefore it's back to TV-monitors.

# MONITORS

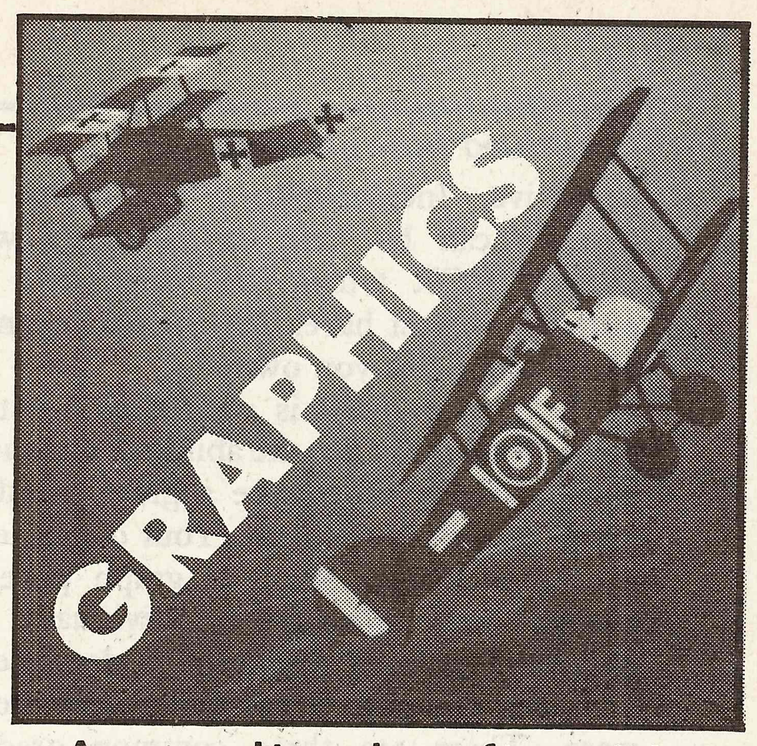


**A monitor is often high on many computer owners' shopping list. In this feature we examine the different types available and explain how to choose one that best suits your purposes; plus a buyers' guide to the most common models.**

it back to a composite video signal. A colour decoder then converts it back to RGB and this is used to drive the video amplifiers and hence the tube. All this encoding and decoding takes its toll and the resulting RGB signals inside the TV set are a poor cousin to what started out in the character generator of your computer.

The best possible results are obtained if RGB is fed to a RGB monitor. Some improvement is noticeable if a PAL composite video signal is used to drive a composite video monitor.

An increasing number of TV/monitors are becoming available which combine all three, i.e., TV set, composite video monitor and RGB monitor. These are currently confined to the low end of the resolution ladder.

If you take a look at figure 2, it will become obvious that a RGB monitor is really a TV set but with the tuner, IF and colour decoder sections missing. So why are they more expensive than a TV set?

First, on purely commercial grounds, they are produced in smaller quantities than TV sets so monitor manufacturers do not enjoy the economies of scale as TV manufacturers. Secondly, the design of a monitor is different. Monitor tubes cost a lot more than TV grade tubes — standard resolution monitors use TV tubes — and more attention is paid to the geometry, setting up, picture size stability, bandwidth and many more parameters, all of which makes them more expensive to produce.

The colour tube, as found in both TV sets and monitors, has three electron guns which, when activated, each send a beam of electrons which hit a particular type of phosphor and emit visible light whose colour is dependent on the type of phosphor. The three phosphors used — one for each gun — produce red, green and blue light. The control circuitry switches each gun on.

In the case of logic — on/off — signals, the control circuitry for each gun — the video amplifier — can switch that particular gun on and off. Depending on the control commands from your computer all three guns can be on or off or of course any one or two guns can be on at any one time — in all eight permutations. Table 1 shows the control for an eight-colour computer with 0=off and 1=on.

Some computers offer 16 or even more colours. There are several ways this can be achieved. For example, each output can have three states: off, half-on and fully on. On a TTL 5 volt system the off state is 0V, the half-intensity is 2.5V and the full intensity is 5V. Another variation is to have an extra control bit called intensity and this method — used on the IBM PC — retains the TTL on-off signals.

An even more sophisticated approach is similar to the first example but the outputs can be level-defined under software control from 0V to 5V in several steps. The greater the number of steps, the larger the permutation of colours. A total of 64 colours is considered to be the limit, since the difference between light brown and medium brown may not be too apparent on the screen.

For the home computer owner there are two types of monitor: RGB and composite video. The latter usually has RGB input capability as well as composite video, has a built-in audio amplifier and speaker and is therefore more

*(continued on next page)*

*Table 1.*

| Red Gun | Green Gun | Blue Gun | Screen colour |
|---|---|---|---|
| 0 | 0 | 0 | Black |
| 1 | 0 | 0 | Red |
| 0 | 1 | 0 | Green |
| 0 | 0 | 1 | Blue |
| 1 | 1 | 0 | Yellow |
| 1 | 0 | 1 | Magenta |
| 0 | 1 | 1 | Cyan |
| 1 | 1 | 1 | White |

## LIST 1. ACORN BBC OR ELECTRON. ORIC. RESEARCH MACHINES RM480Z.

**Key: L = Includes leads**
**G = anti-glare screen**
**T = green-only button**
**S = selective transmission glass**

| Manufacturer | Model | Price inc.VAT | Resolution Standard | Medium | High | Tube size | Inputs RGB | Composite video + RGB | Sound | Plastic case | Metal case | Case colour | Country of origin | Comments |
|---|---|---|---|---|---|---|---|---|---|---|---|---|---|---|
| Microvitec | 1431/MS | £299 | ● | | | 14" | ● | | | | ● | brown/beige | UK | L |
| Microvitec | 1451/DS | £299 | | ● | | 14" | ● | | | ● | | brown/beige | UK | L |
| Microvitec | 1441/MS | £506 | | | ● | 14" | ● | | | | ● | brown/beige | UK | L |
| Microvitec | 1441/DS | £506 | | | ● | 14" | ● | | | ● | | brown/beige | UK | L |
| Compuser | 2000 | £325 | | ● | | 14" | ● | | | ● | | cream/black | UK | L,G,S |
| Compuser | 2000R | £325 | | ● | | 14" | ● | | | ● | | red/black | UK | L,G,S |
| Novex | 1414 | £215 | ● | | | 14" | | ● | ● | | ● | cream/black | Taiwan | L,S,T |
| Novex | 1416 | £368 | | ● | | 14" | ● | | | | ● | cream/black | Taiwan | L,S,T |
| Novex | 1418 | £431.25 | | | ● | 14" | ● | | | | ● | cream/black | Taiwan | L,S,T |
| Kaga | Taxan Vision II | £327.75 | | ● | | 12" | ● | | | ● | | cream | Japan | |
| Kaga | Taxan Vision III | £458.85 | | | ● | 12" | ● | | | ● | | cream | Japan | |

## LIST 2. SINCLAIR SPECTRUM.

| Manufacturer | Model | Price inc.VAT | Resolution Standard | Medium | High | Tube size | Inputs RGB | Composite video + RGB | Sound | Plastic case | Metal case | Case colour | Country of origin | Comments |
|---|---|---|---|---|---|---|---|---|---|---|---|---|---|---|
| Microvitec | 1431/MZ3 | £259 | ● | | | 14" | (special interface) | | ● | | | Black | UK | L |
| Compuser | 2000S | £370 | | ● | | 14" | | ● | ● | ● | | Black | UK | L |

(continued from previous page)

expensive. Incidentally, a composite video monitor can be used to advantage with a modern VCR which has video and audio outputs — most have. The choice depends on which computer you own.

The next variable is resolution. First, let's define resolution: it is the ability of a monitor to display clearly or resolve a given number of pixels or picture elements. Your computer sees the monitor as a sheet of graph paper and controls each "square" individually. The degree of required resolution is dependent on both the computer's capability and the software. There are three common grades of monitor: standard, medium and high.

Standard types use TV grade tubes which have a "pitch" of around 0.6mm. The pitch is the distance between adjacent groups of phosphors on the face of the tube. This is by far the most important parameter which determines a monitor's resolving ability. The closer the distance between the phosphors, the greater the number of phosphor groups — a group contains three phosphors — one red, one blue and one green — that can be squeezed in over the face of the tube and therefore the more pixels it can resolve.

## Gives excellent results

Going back to standard resolution monitors, a 14 inch 0.6mm pitch tube will resolve around 450 pixels per horizontal line. This gives excellent results for text which has 40 characters per line. A 20 inch equivalent using a 0.8mm pitch tube is capable of around 500 pixels. Notice that the degradation of pitch — from 0.6 to 0.8mm — is more than made up for by the increased screen size which simply allows more phosphor groups to be laid down.

Standard resolution monitors are available in both RGB and RGB/composite video versions. We do not, however, recommend them since they represent very poor value for money compared to a TV-monitor like the new Ferguson MC-01. As far as performance is concerned there is nothing to choose between any standard resolution monitor and a TV-monitor so, unless there is a special reason such as a requirement for a metal-cased unit, we suggest you look around and compare deals on TV-monitors.

The next step is medium resolution. For a 14inch tube with a nominal pitch of 0.43mm, the resolution is about 580 pixels. Again these are available in either RGB only or RGB/composite video with sound. For most applications and for most computers, this is the resolution we would recommend. Prices have come down recently and they now represent good value for money.

A medium resolution 14inch monitor will resolve 80 characters per line — just! If you use your computer in this mode for most of your work, it isn't quite good enough but it is a substantial improvement overall as compared to standard resolution.

If you do make extensive use of 80-character text — word processing for example — then we would strongly recommend that you buy a monochrome monitor for around £80. These give a better display than any colour monitor at a fraction of the price but they are no good for games or any program which has colour graphics. The only other alternative is a high resolution colour monitor. Staying with our example of a 14inch unit, these have a pitch of 0.31mm and a resolution of about 800 pixels.

*Table 2.*

| | Games or general use | Text or business use | Combined |
|---|---|---|---|
| TV-monitor | 1 | 0 | 1 |
| Standard-res. | 0 | 0 | 0 |
| Medium-res. | 2 | 1 | 2 |
| High res. | 0 | 2 | 1 |
| Mono-chrome | 0 | 2 | 0 |

Key: 0: Not recommended
1: Will do
2: Good

Bear in mind that these ratings take many different aspects into account, including price, and they are therefore subjective.

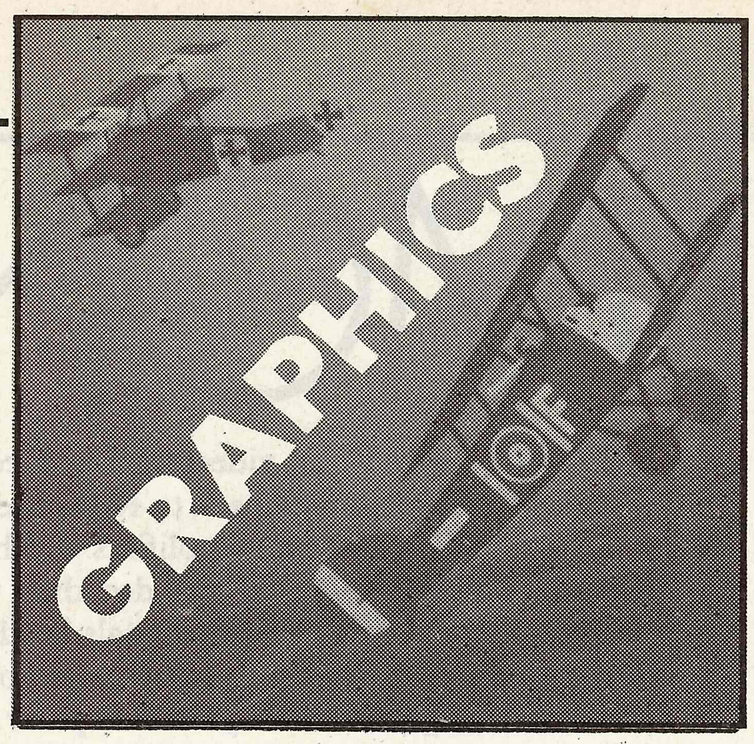


They are perfectly suitable for 80-character use but they are very expensive — over £400. This tends to put them beyond the reach of most home computer users unless you are using your computer as a business tool or have a lot of money. Table 2 is a quick reference.

## Bandwidth figures meaningless

Video bandwidth figures are very often quoted but are really quite meaningless and you should not use them as a measure of the overall display quality. Video bandwidth is the ability of the video amplifiers in a monitor to reproduce high frequency — i.e., fast switching — signals without degradation. It is quoted in MHz or megahertz and is usually the frequency at which the output of the amplifiers drops by 3dB as compared to lower frequencies.

It is the monitor designer's job to ensure that there is more than adequate bandwidth for the type of tube used. As a guide, a standard resolution TV-type tube requires 6MHz, a medium resolution tube around 10MHz and a high resolution tube about 12MHz. No advantage will be gained if you drive a standard resolution tube with 20MHz amplifiers. ■

### LIST 3. COMMODORE 64. DRAGON. ATARI.

| Manufacturer | Model | Price inc.VAT | Resolution Standard | Medium | High | Tube size | Inputs RGB | Composite video + RGB | Sound | Plastic case | Metal case | Case colour | Country of origin | Comments |
|---|---|---|---|---|---|---|---|---|---|---|---|---|---|---|
| Microvitec | 1431AP/MS | £259 | ● | | | 14" | | ● | ● | | ● | brown/beige | UK | L |
| Microvitec | 1431AP/DS | £259 | ● | | | 14" | | ● | ● | ● | | brown/beige | UK | L |
| Microvitec | 1451AP/MS | £375 | | ● | | 14" | | ● | ● | | ● | brown/beige | UK | L |
| Microvitec | 1451AP/DS | £375 | | ● | | 14" | | ● | ● | ● | | brown/beige | UK | L |
| Microvitec | 2030/CS5 | £443 | ● | | | 20" | | ● | ● | | ● | brown/beige | UK | L |
| Microvitec | 2040/CS5 | £788 | | ● | | 20" | | ● | ● | | ● | brown/beige | UK | L |
| Compuser | 2000C | £370 | | ● | | 14" | | ● | ● | ● | | cream/black | UK | L,G,S |
| Compuser | 2000K | £370 | | ● | | 14" | | ● | ● | ● | | grey/grey | UK | L,G,S |
| Novex | 1414 | £215 | ● | | | 14" | | ● | ● | | ● | cream/black | Taiwan | L,S,T |
| Kaga | Taxan Vision Ex | £247.25 | ● | | | 12" | | ● | ● | ● | | cream | Japan | |

### LIST 4. SINCLAIR QL.

| Manufacturer | Model | Price inc.VAT | Resolution Standard | Medium | High | Tube size | Inputs RGB | Composite video + RGB | Sound | Plastic case | Metal case | Case colour | Country of origin | Comments |
|---|---|---|---|---|---|---|---|---|---|---|---|---|---|---|
| Microvitec | 1451/DQ3 | £275 | | ● | | 14" | ● | | | ● | | Black | UK | L |
| Microvitec | 1451/MQ3 | £275 | | ● | | 14" | ● | | | | ● | Black | UK | L |
| Compuser | 2000Q | £325 | | ● | | 14" | ● | | | ● | | Black | UK | L,G,S |
| Kaga | Sinclair Vision QL | £299 | | ● | | 12" | ● | | | ● | | Black | Japan | |